CNENGR 116
Fundamentals of Digital Electronics

Lecture 11 – Memory & Basic Processors

Dr Zhongming Zhang

zhongming.zhang@lancaster.ac.uk

School of Engineering

Lancaster University

Science and Technology at Lancaster

Lancaster University College at Beijing Jiaotong University

Objectives

Introduce SRAM, DRAM and FLASH

Basic Processor : State Machine, Logic and Flip-Flops

Memory

Memory or “digital memory” is the ability to store data in a digital form for a period of time. Memory stored in packets of information (ones or zeros), known as data **bits**. A unit of 8 bits is known as a **byte**. A unit of 4 bits is known as a **nibble**. A complete unit of information is called a **word** and generally consists of one or more bytes.

Memory Arrays

Memory arrays can have various sizes & configurations. For example a 64-cell array could be made from 8x8 cells or 16x4 or 64x1 cells.

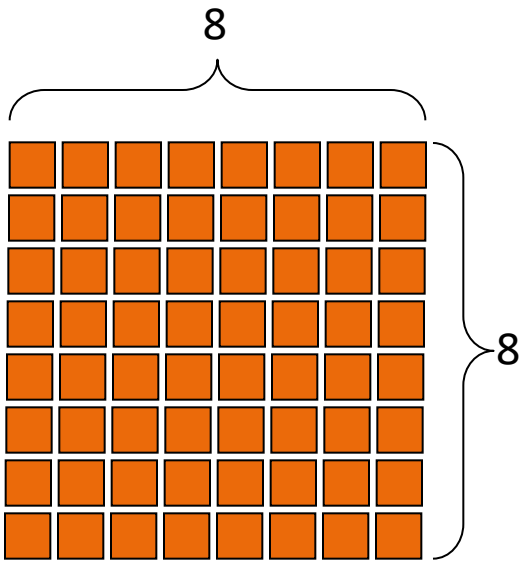

Storage capacity also varies. Example: 16k x 8 memory can store 16,384 words of 8 digits. Note that 16,384 = 2^{14}. Which is known as 16k memory. Storage capacity is the total amount of data stored on the device.

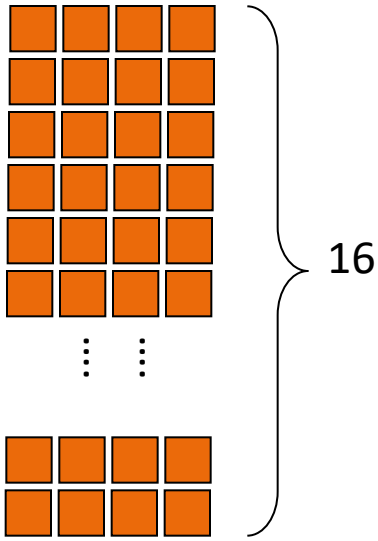

The k with respect to memory generally refers to an exact power of 2, so a k is 1024, which is 2^{10}.

16 x 1024 = 2^4 x 2^{10} = 2^{14} = 16384 bytes

2^{14} x 8 = 131072 = 2^{14} x 2^3 = 2^{17} bits

Memory array structure

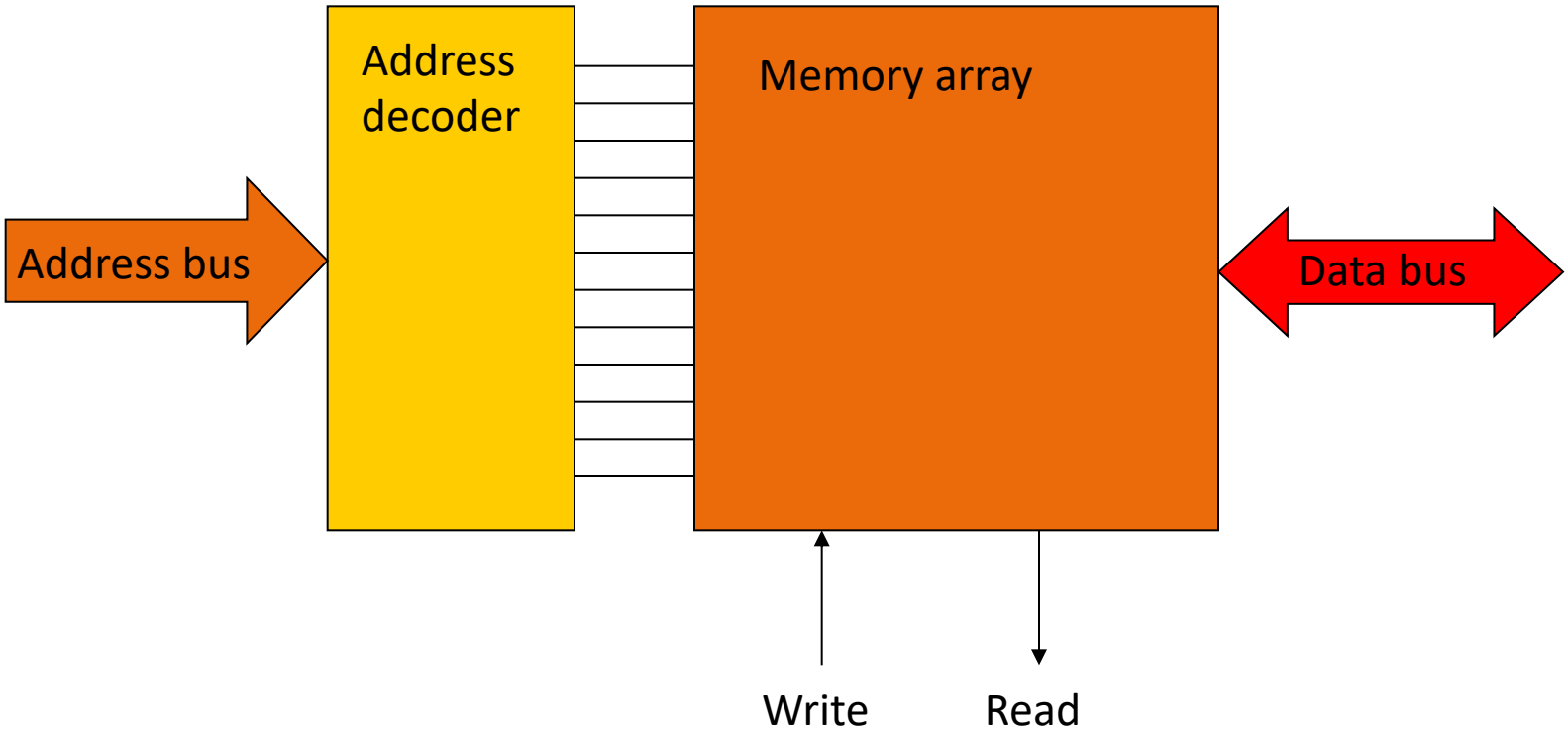

Writing operation

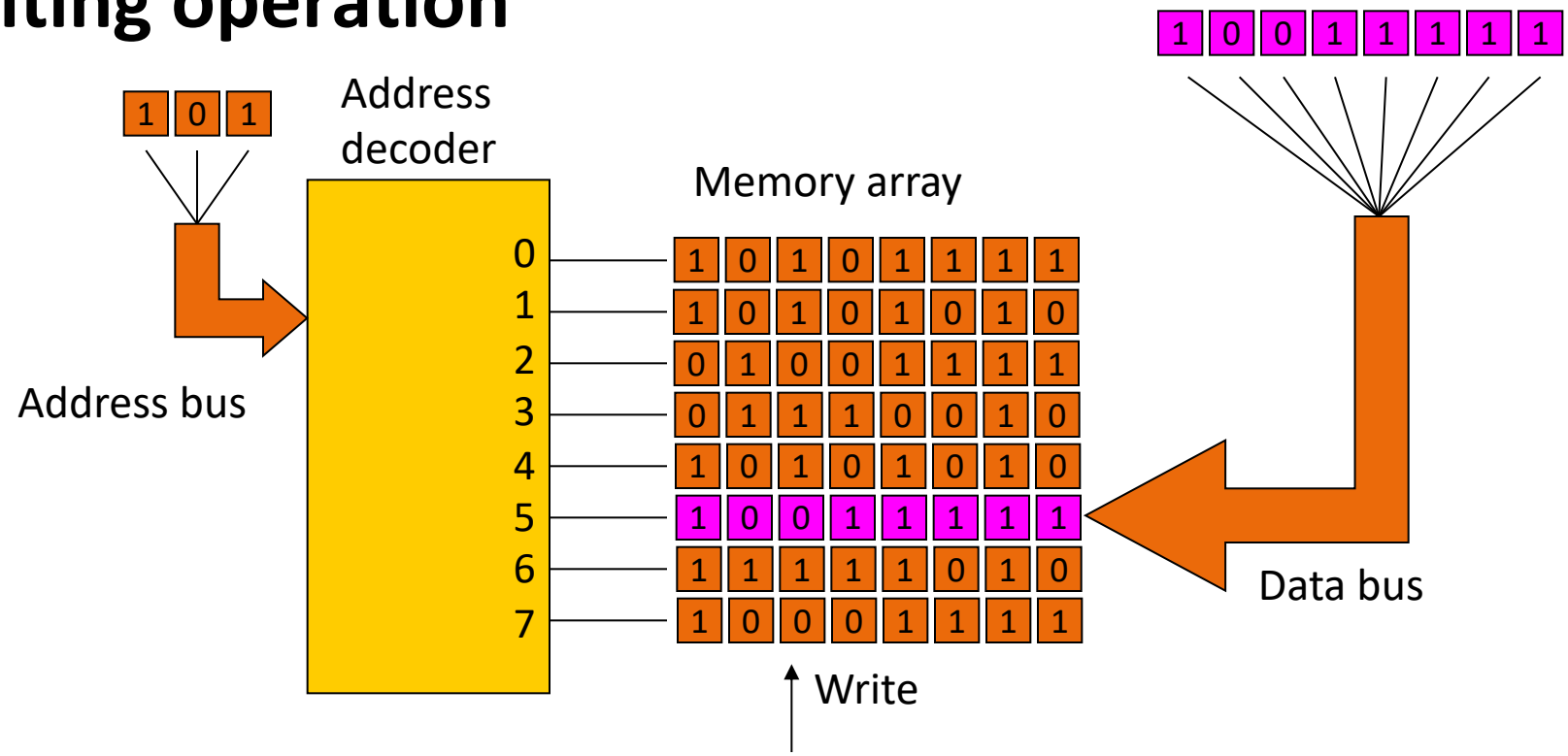

1. Address code 101 is placed on the address bus and address 5 is selected.
2. Data byte is placed on the bus
3. Write command causes the data to be stored in address 5, replacing the previous data

Reading operation

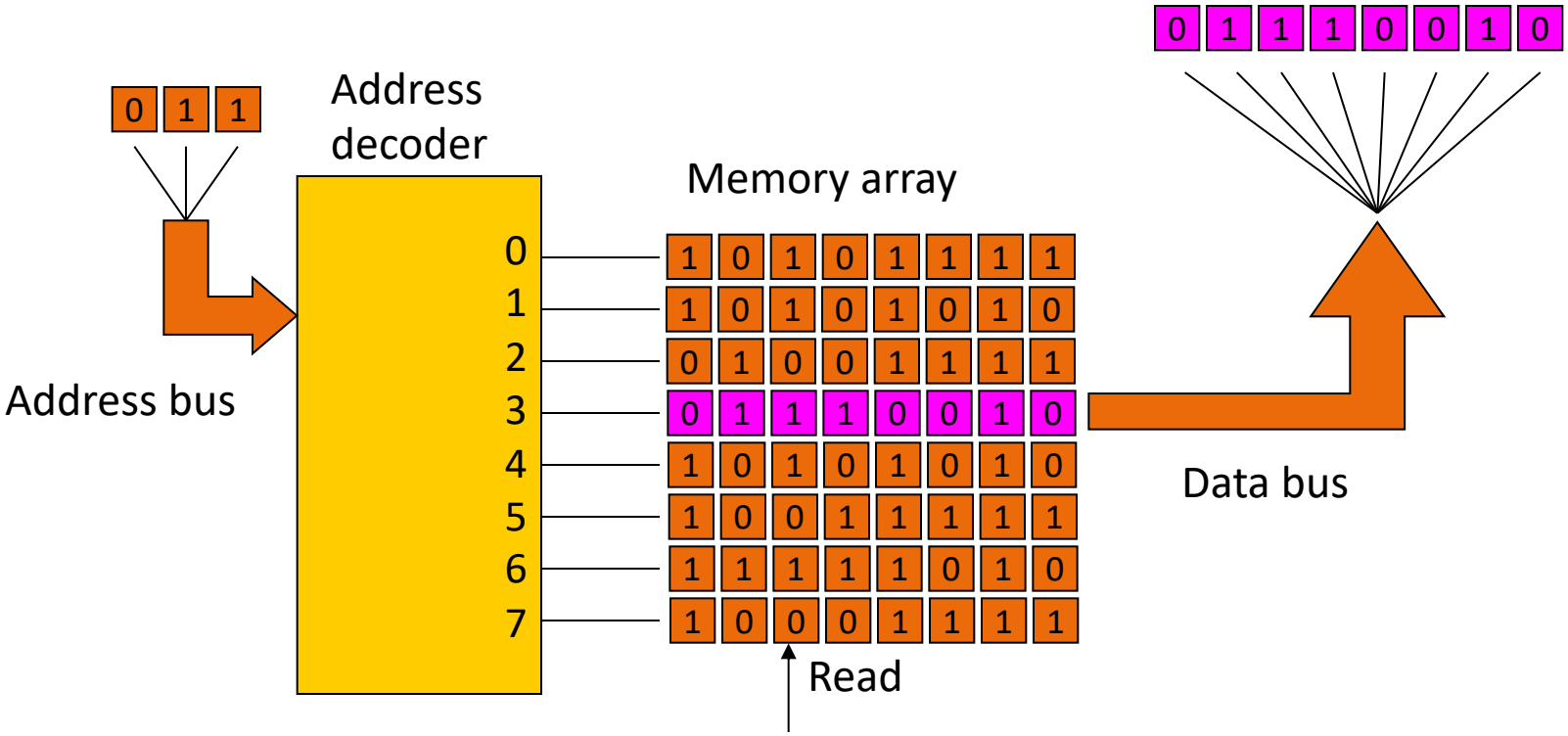

1. Address code 011 is placed on the address bus and address 3 is selected.
2. Read command is applied
3. The contents of address 3 are placed on the data bus and shifted into data register. The contents of address 3 are not erased by the reading operation

Memory types

RAM (random-access memory) is a type of memory in which all addresses are accessible in an equal amount of time and can be selected in any order for the read or write operation. Most RAM memories are volatile (they loose data once power is turned off)

ROM (read-only memory) is a type of memory in which data is stored permanently or semi-permanently. Data can be read, but none can be written. Most of these memory devices are non-volatile.

Cache Memory

- High speed memory that stores a copy of a small section of main memory
- Faster than main memory and stored next to the processor

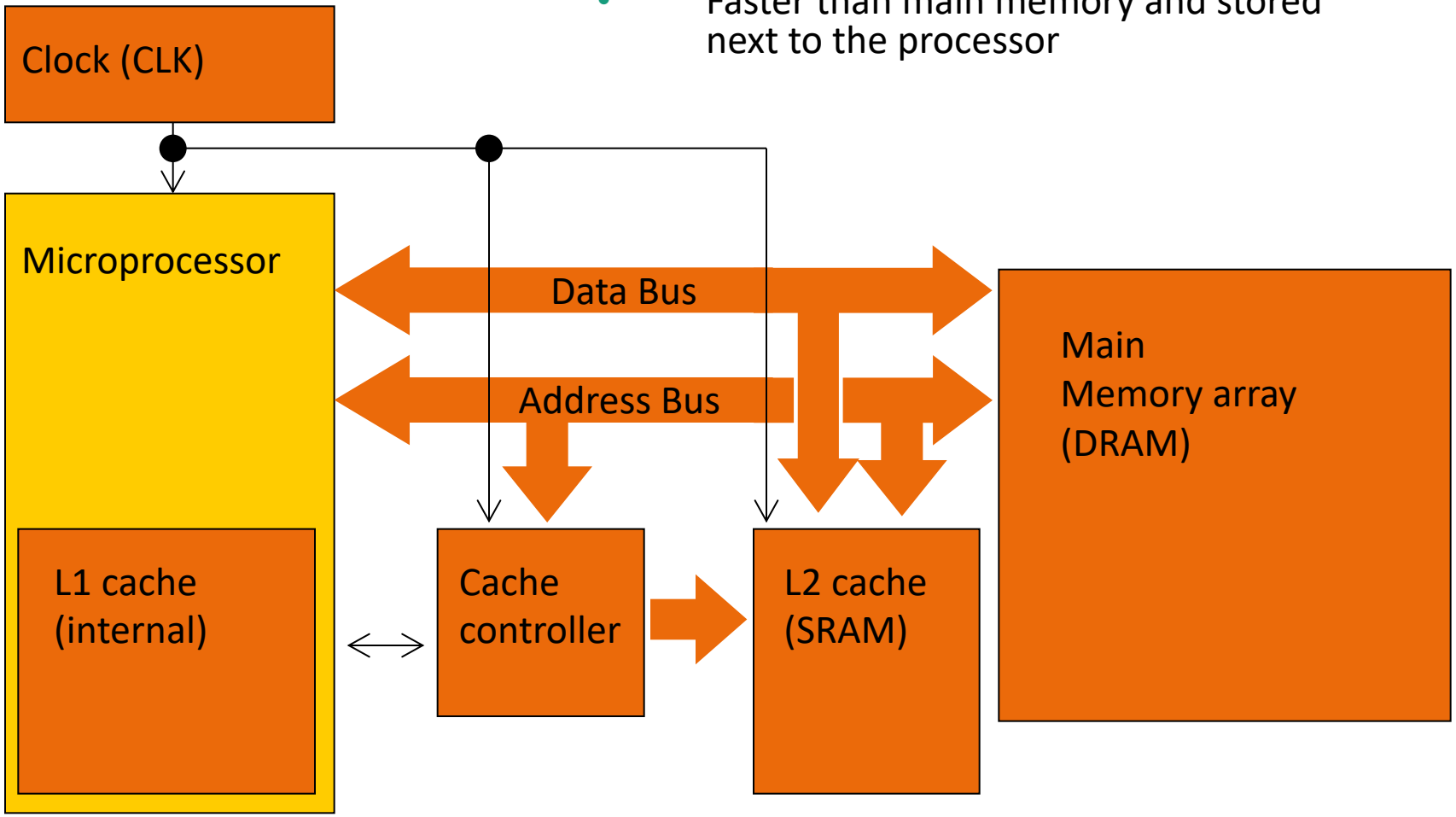

Static RAM (SRAM)

Memory cell:

All static RAMs are built from single bit latches. As long as DC power is applied, the cell will retain a 1 or 0 state indefinitely. If power is removed, the stored data is lost.

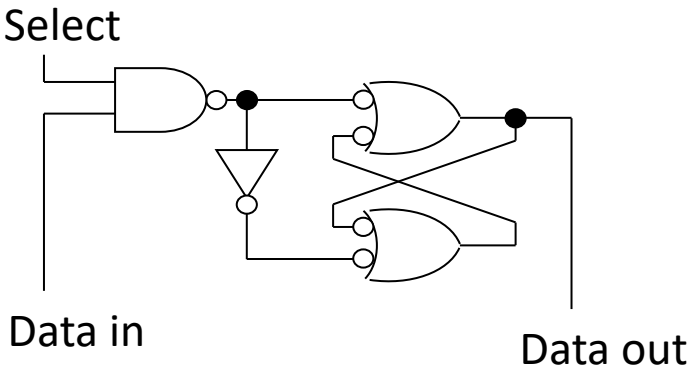

Our D-Type latch could be used to store a “1” or “0” but it needs many transistors

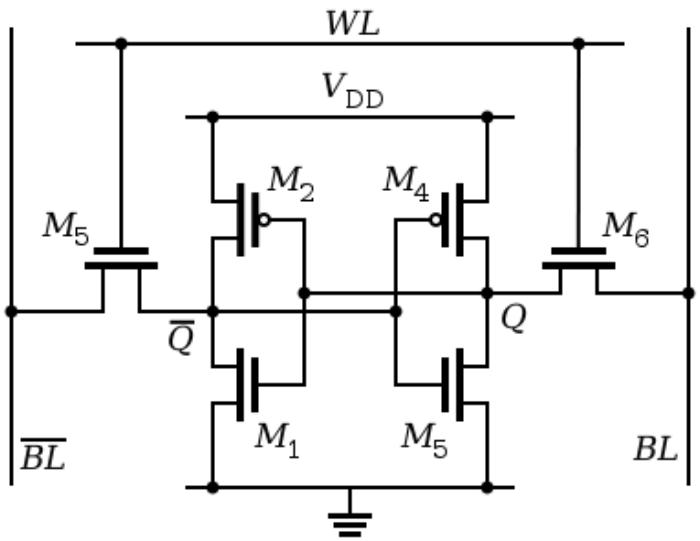

A slower latch but only 6 transistors!

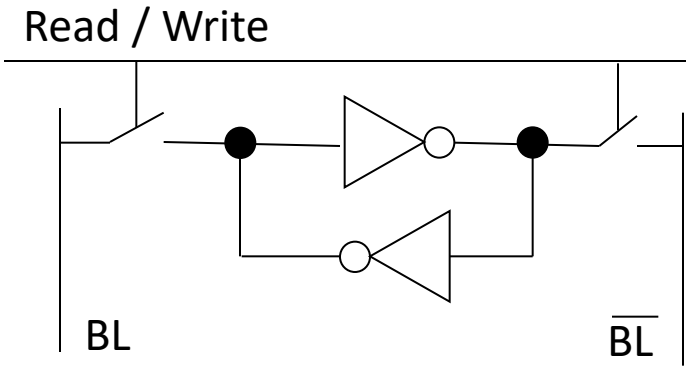

BL – Bit line, where bit is read or written

Static RAM (SRAM)

- More expensive than DRAM,
- Faster than DRAM
- Less power hungry (especially idle) than DRAM.
- Easier to control and interface to
- More truly random access than modern types of DRAM.
- Less dense than DRAM and is therefore not used for high-capacity, low-cost applications such as the main memory in personal computers.
- Memory with a typical access time of 500 ps

Dynamic RAM (DRAM)

Dynamic random access memory (DRAM) is a type of random access memory that stores each bit of data in a separate capacitor within an integrated circuit. Since real capacitors leak charge, the information eventually fades unless the capacitor charge is refreshed periodically. Because of this refresh requirement, it is a dynamic memory as opposed to SRAM and other static memory.

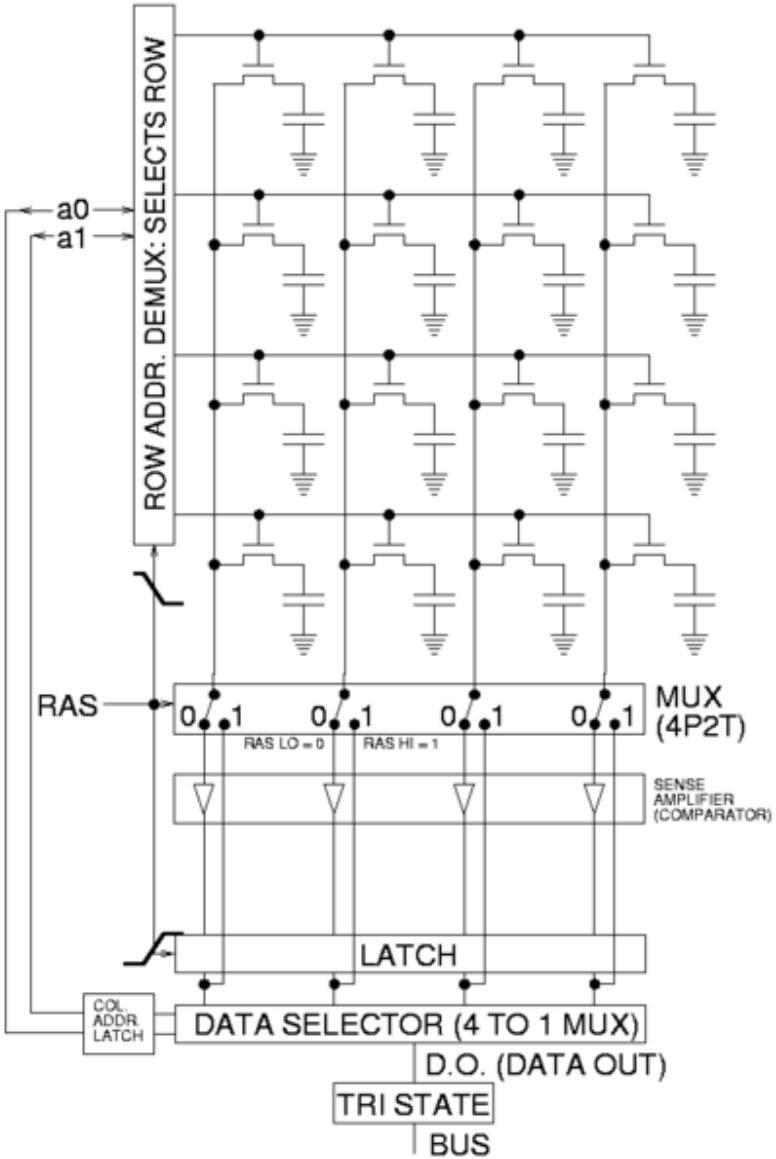

Dynamic RAM (DRAM)

Memory cell:

Dynamic memory cells store data in a small capacitor rather than in a latch. The advantage of this type of cell is that it is very simple, thus allowing very large memory arrays to be constructed on a chip at a lower cost per bit.

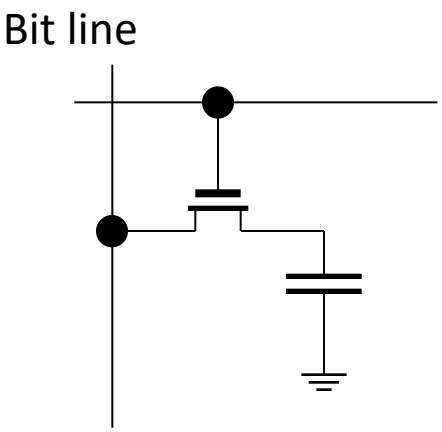

The disadvantage is that the storage capacitor cannot hold its charge over an extended period of time and will lose the stored data bit unless its charge is refreshed periodically (e.g. 64 ms). The refresh operation requires additional circuitry and complicates the operation of DRAM.

Flash Memory

Flash is a high density read/write memory that is non-volatile, which means that the data can be stored indefinitely even without the power.

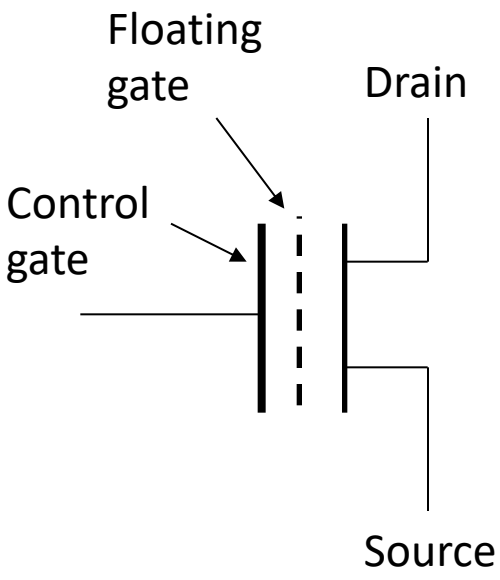

Cell operation:

The cell consists of a single MOS transistor with a control gate and a floating gate in addition to the drain and source. The floating gate stores electrons (charge) as a result of sufficient voltage applied to the control gate.

Flash Memory

The data is stored as a charge. 0 = a lot of electric (negative) charge and 1 = less charge.

Stored value 0

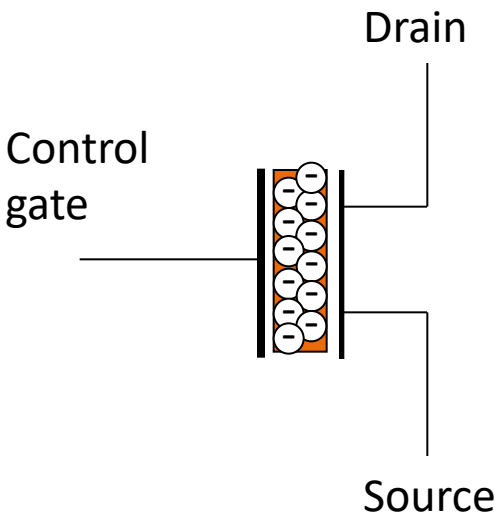

Stored value 1

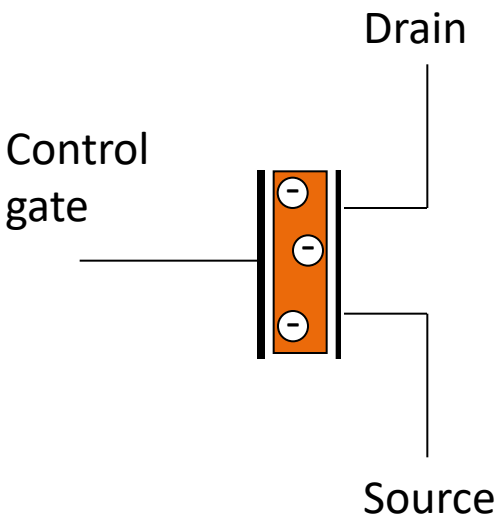

Comparison of solid state memory types

Memory Type	Non-volatile	High Density	One transistor cell	In-system writability
Flash	Yes	Yes	Yes	Yes
SRAM	No	No	No	Yes
DRAM	No	Yes	Yes	Yes
ROM	Yes	Yes	Yes	No

MRAM Memories

MRAM (Magnetic RAM) is based on RAM technology with a magnetic data bit stored by magnetising an element in one direction or the other.

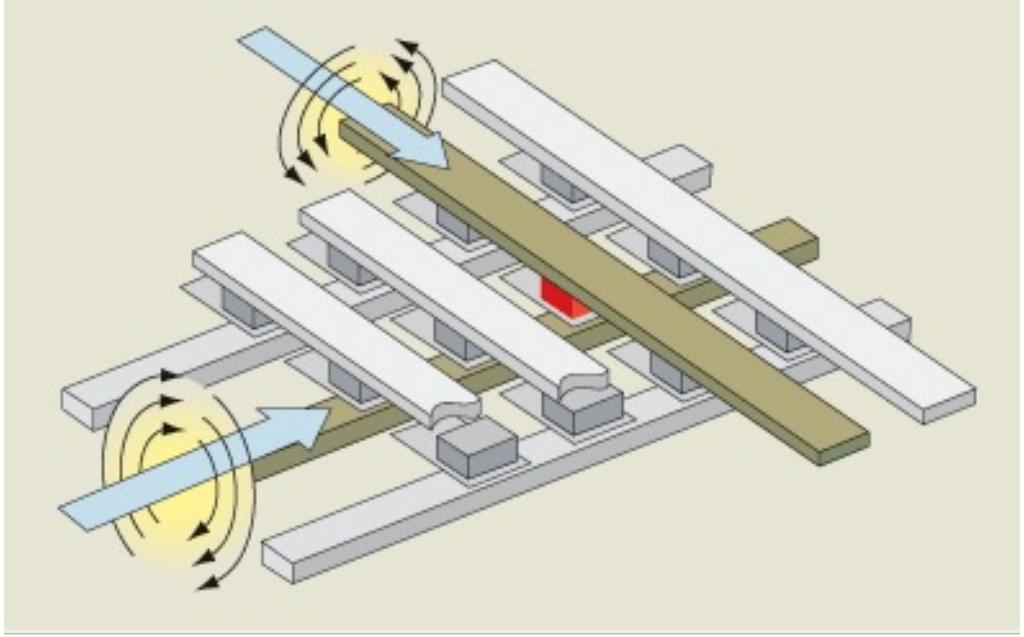

Figure 3

MRAM write operation.

Millipede data storage

Rather than using traditional magnetic or electronic means to store data, Millipede uses thousands of nano-sharp tips to punch indentations representing individual bits into a thin plastic film. The result is akin to a nanotech version of the venerable data processing 'punch card' developed more than 110 years ago, but with two crucial differences: the 'Millipede' technology is re-writeable (meaning it can be used over and over again), and may be able to store more than 3 billion bits of data in the space occupied by just one hole in a standard punch card.

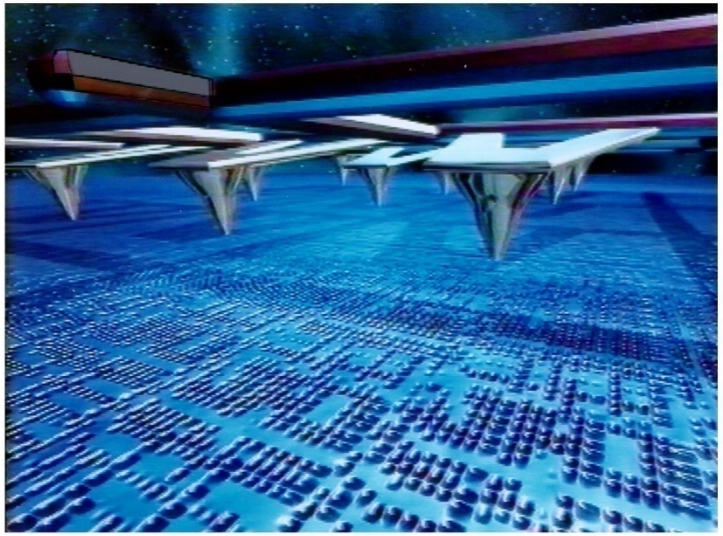

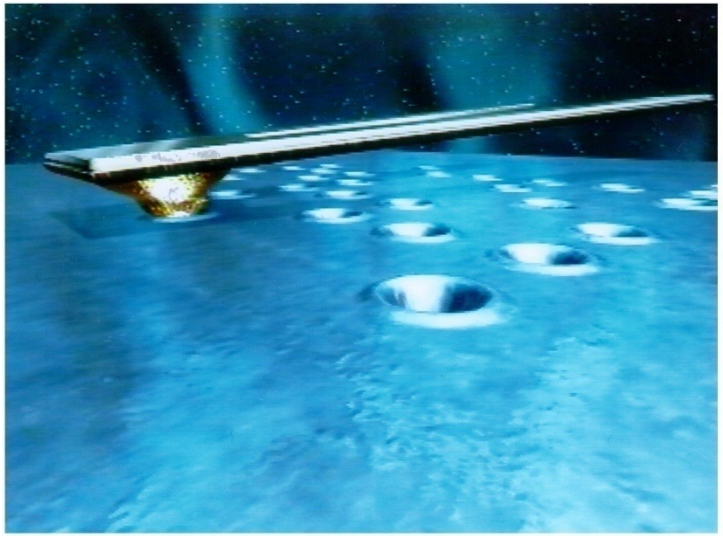

Courtesy of IBM

A Basic Processor

The von Neumann architecture is a computer design model that uses a processing unit and a single separate storage structure to hold both instructions and data.

The term "stored-program computer" is generally used to mean a computer of this design, although as modern computers are usually of this type, the term has fallen into disuse

John von Neumann

1903-1957

Von Neumann Architecture

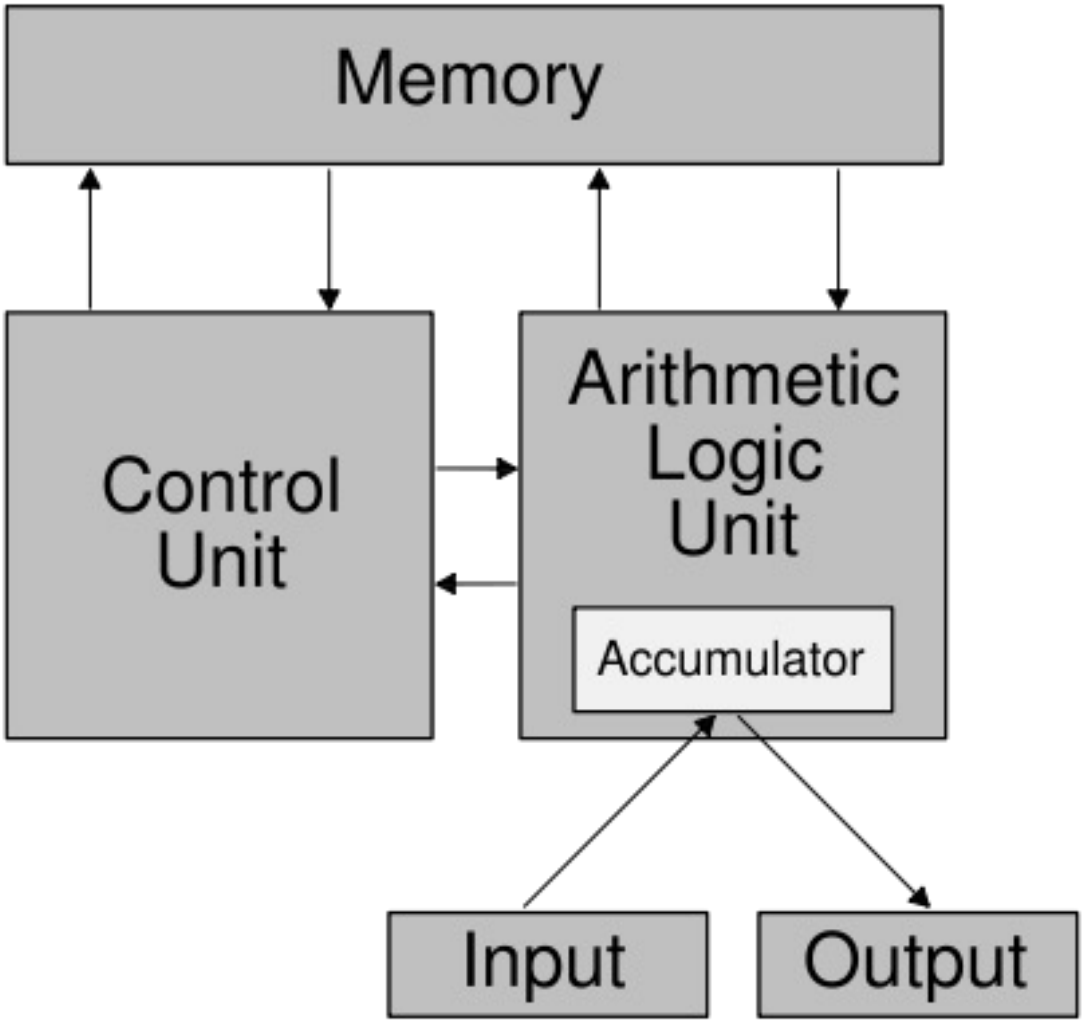

source: Wikipedia

Von Neumann Example

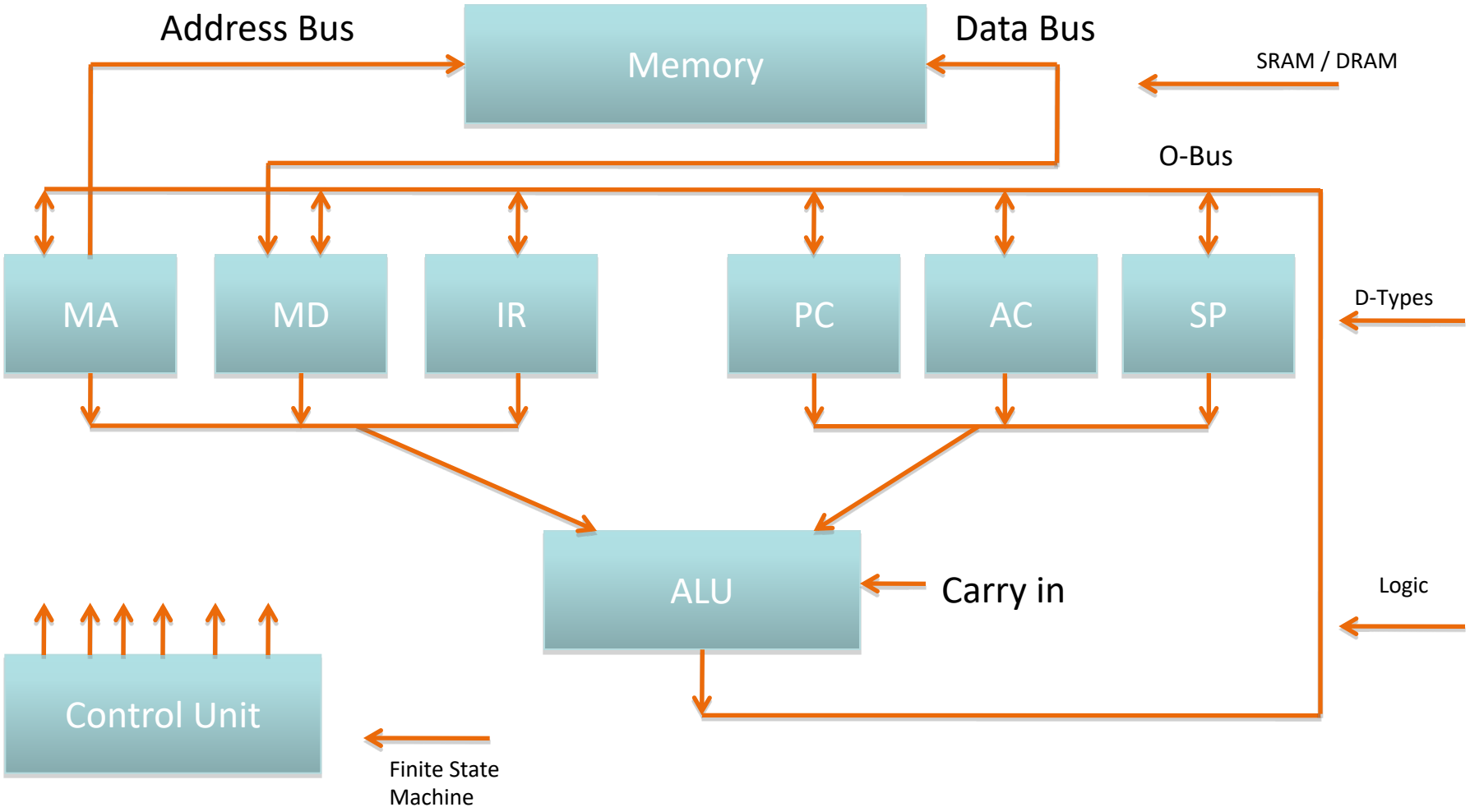

Registers are MA - Memory Address, MD - Memory Data, IR - Instruction Register, PC - Program Counter, AC - Accumulator, SP - Stack Pointer

Von Neumann Process

- Control unit is a Finite State Machine with inputs from the registers (MA-SP)
  - Registers are – MA: Memory Address, MD: Memory Data, IR: Instruction Register, PC: Program Counter, AC: Accumulator, SP: Stack Pointer
- **Typical sequence**
  - the ADD instruction which adds the contents of the accumulator to the data stored in the memory location specified in the instruction. As all operations must be synchronised, each transfer operates on the edge (rising) of the master clock.

Advantages and disadvantages of Von Neumann Architecture

Advantages

The ability to treat instructions as data is what makes assemblers, compilers and other automated programming tools possible

Disadvantages

The von Neumann bottleneck described on the next slide

Program modifications can be quite harmful, either by accident or design

source: Wikipedia

How the fetch, execute cycle works (Von Neumann architecture)

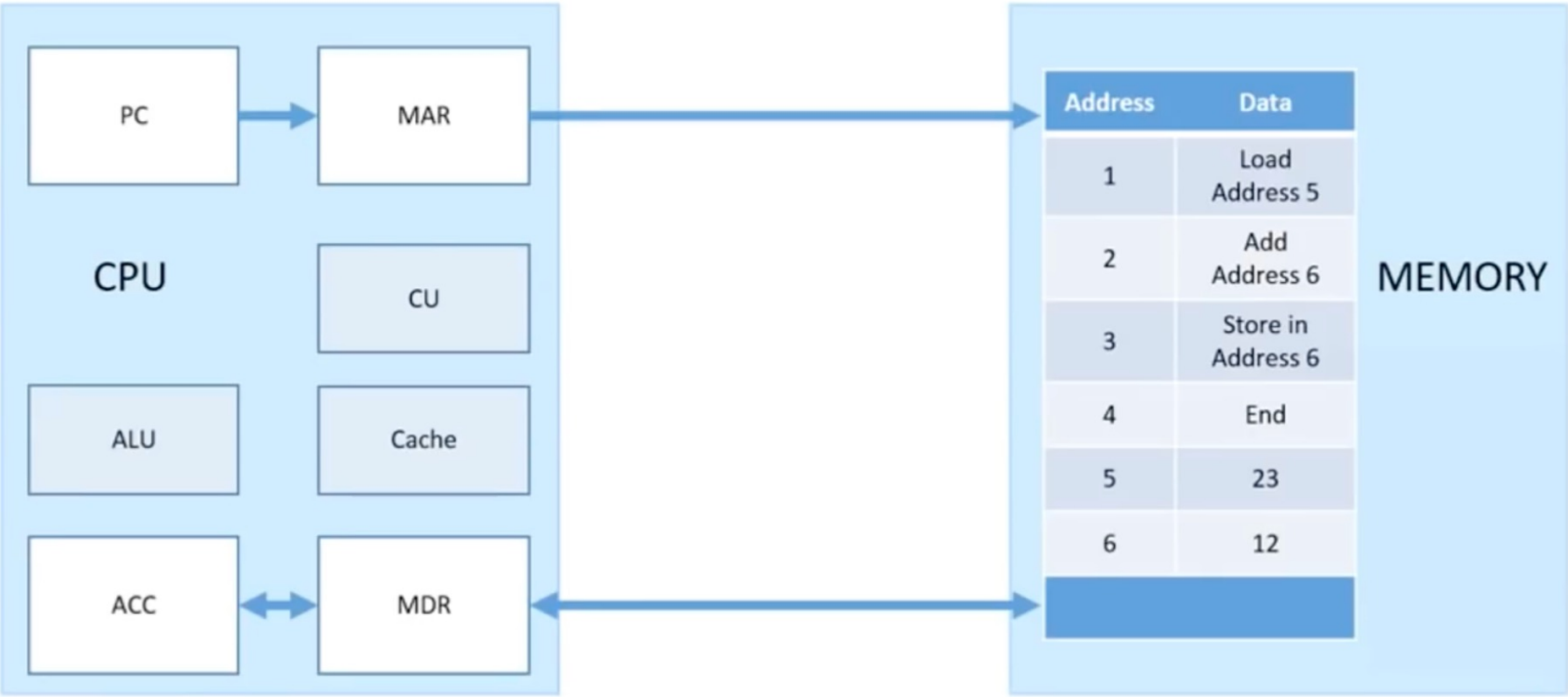

Von Neumann Bottleneck

The separation between the CPU and memory leads to the von Neumann bottleneck, the limited throughput (data transfer rate) between the CPU and memory compared to the amount of memory. In modern machines, throughput is much smaller than the rate at which the CPU can work. This seriously limits the effective processing speed when the CPU is required to perform minimal processing on large amounts of data. The CPU is continuously forced to wait for vital data to be transferred to or from memory. As CPU speed and memory size have increased much faster than the throughput between them, the bottleneck has become more of a problem.

The performance problem is reduced by a cache between CPU and main memory.

source: Wikipedia

Summary

- Introduced Memory
- Introduced Von Neumann architecture